1-415 Hook Latch

Sliding doors with hooked cam, Push to close

Product Notes:
- Hooked cam for sliding doors
- Push to close latch

Material:
- **Latch:** Steel, Zinc Plated
- **Cam:** Steel, Zinc Plated
- **Plug:** PE, Black
- **Lock support:** Steel, Zinc Plated

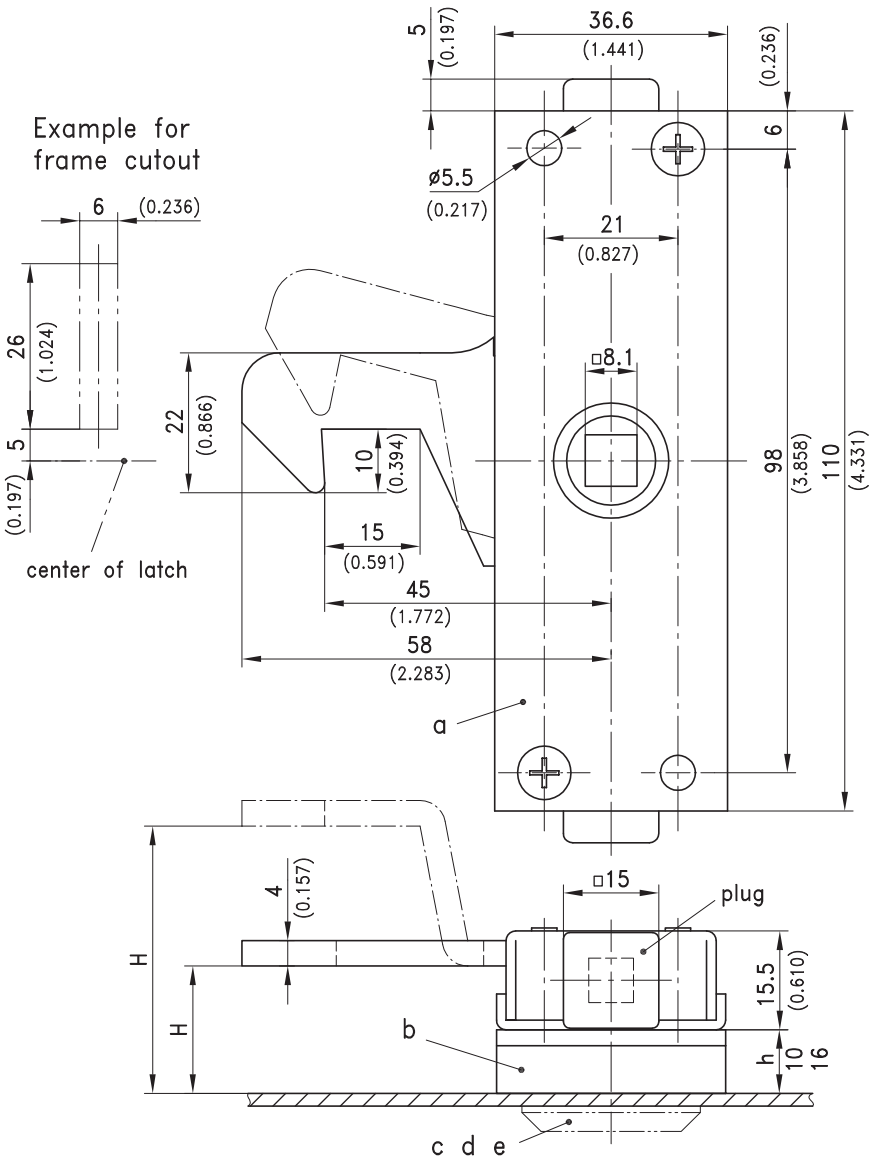

a) Hooked Cam Latch			Straight Hook	Curved Hook	See Page
Hook RH			235-9015	235-9017	
Hook LH			235-9016	235-9018	
b) Latch support	H mm/inch	H mm/inch			
	10/0.394	20/0.787	235-1001	-	
	16/0.630	26/1.024	235-1002	-	
	10/0.394	42/1.654	-	235-1001	
	16/0.630	48/1.890	-	235-1002	
c) Inserts and escutcheon					03.32
d) T and L-Handle					03.31
e) Swinghandle					02.57

10-01-2012 © copyright by DIRAK / Germany