4-225 Hinge Pr01 180°

Nested door

Product Notes:
- Fasten to panel with screws or weld-on

Material:
- **Leaves:** Steel, Zinc Plated
- **Hinge middle part (not drawn):** Steel, Untreated
- **Hinge end parts:** Steel, Zinc Plated
- **Washer:** Brass, Nickel Plated
- **Pin:** Steel, Nickel Plated

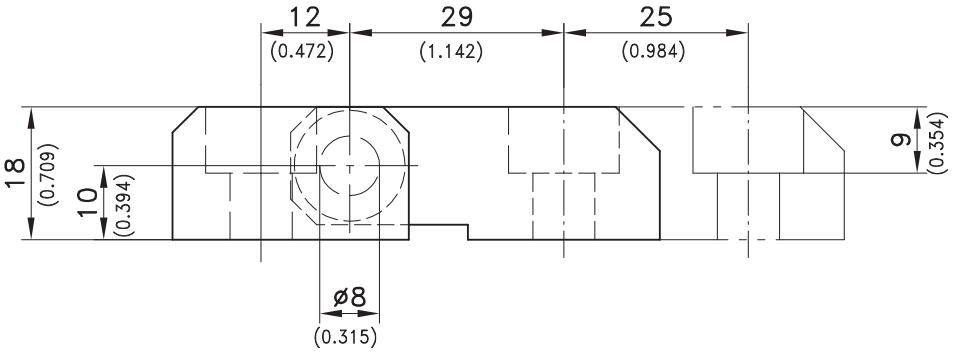

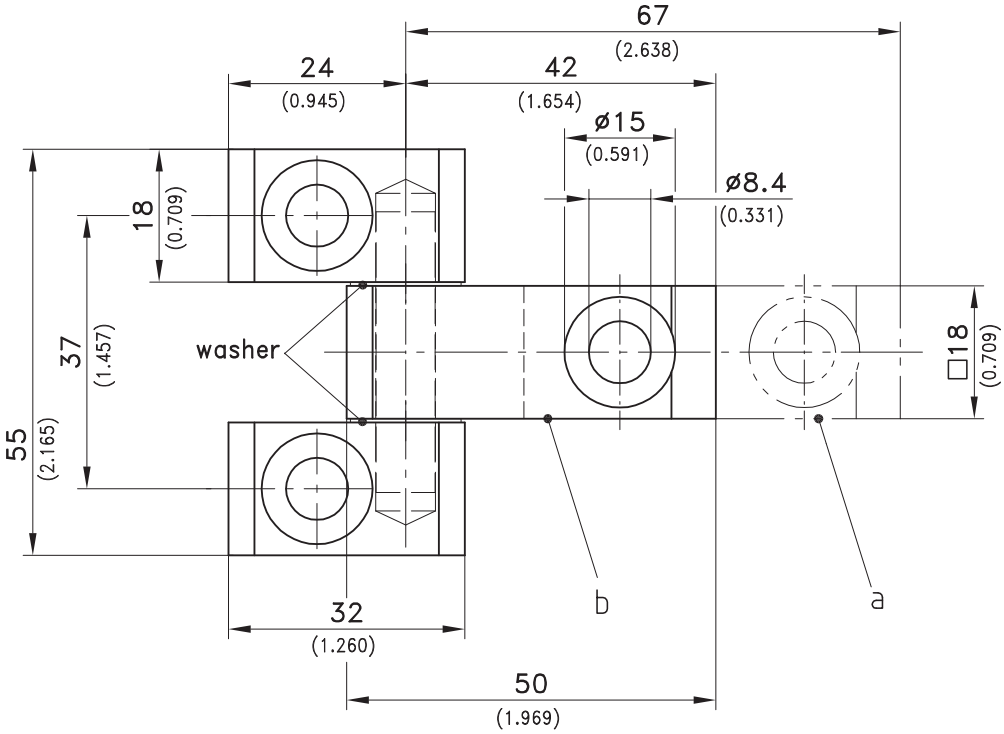

Version	Part No.
a) Middle part long, with two holes Ø8.4 mm / 0.331	219-9109
b) Middle part short, with one hole Ø8.4 mm / 0.331	219-9113
c) Middle part short, without hole (weld-on)	219-9114

10-01-2012 © copyright by DIRAK / Germany