4-330SL Hinge Pr01 SNAP-LINE 130°

Frame leaf tool-less installation, Nested door

Product Notes:
- 180° opening angle
- Other data and dimensions - see Product System 4-330
- Screw-on - see Product System 4-330
- Stainless steel - see Product System 7-200

Material:
- **Leaves:** Zinc Die, Black
- **Loose pin:** Steel, Zinc Plated
- **Fixed pin:** Stainless Steel
- **Bushings:** PA, Natural
- **Washers:** Steel, Zinc Plated
- **Wings:** Sintered Metal, Coated

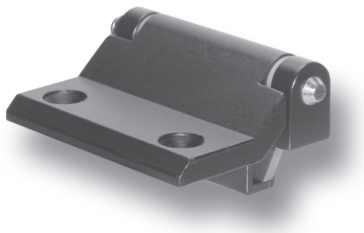

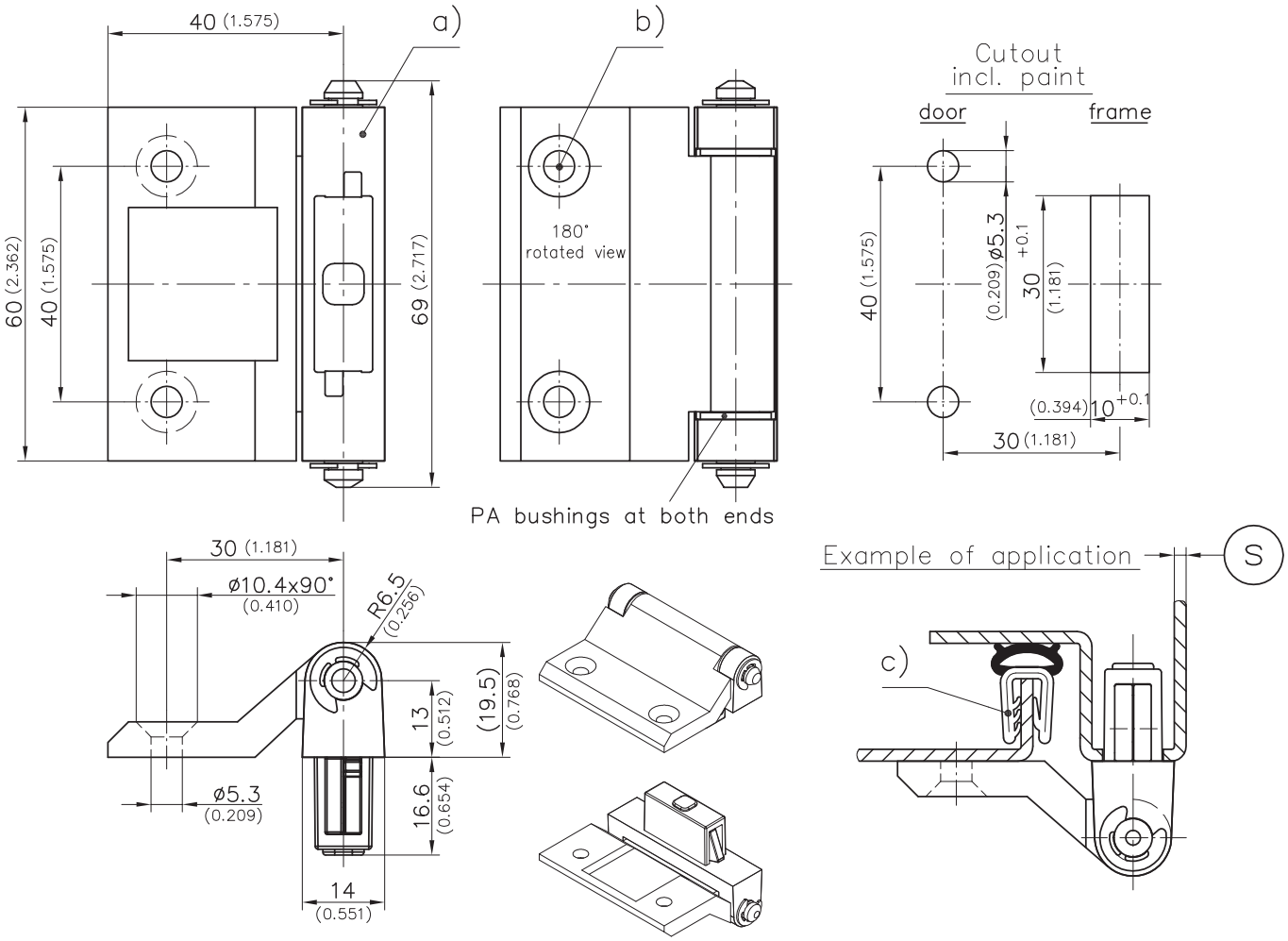

a) Hinge	Clamping Range Ⓢ	Loose Pin Steel, Zinc Plated	Fixed Pin Stainless Steel	See Page
	1.2 - 1.7	417-9001.00-00015	417-9101.00-00015	
	1.7 - 2.2	417-9001.00-00020	417-9101.00-00020	
	2.2 - 2.7	417-9001.00-00025	417-9101.00-00025	
	2.7 - 3.2	417-9001.00-00030	417-9101.00-00030	
b) Countersunk machine screws				10.23
c) Clip-on profile		209-0201.00-00000	209-0201.00-00000	05.12
d) Cover for cutout 30x10mm		292-0401.00-03010	292-0401.00-03010	10.14
e) Reinforcement plate for cutout 30x8 and 30x10mm		292-0702.15-01030	292-0702.15-01030	10.16
f) Tool for uninstallation		292-0306.80-02530	292-0306.80-02530	10.17

10-01-2012 © copyright by DIRAK / Germany