4-284 Hinge Pr04 180°

Surface mounted door, Lift-off

Product Notes:
- Fasten to panel with screws or weld-on
- Lift-off
- Four common versions are shown. Other versions on request
- 180° opening angle
- **The covers for version "a" and "d" have extremely sharp edges. Use caution to avoid injury**

Material:
- **Leaves:** Steel, Zinc Plated
- **Covers:** Stainless Steel AISI 304

Examples of application

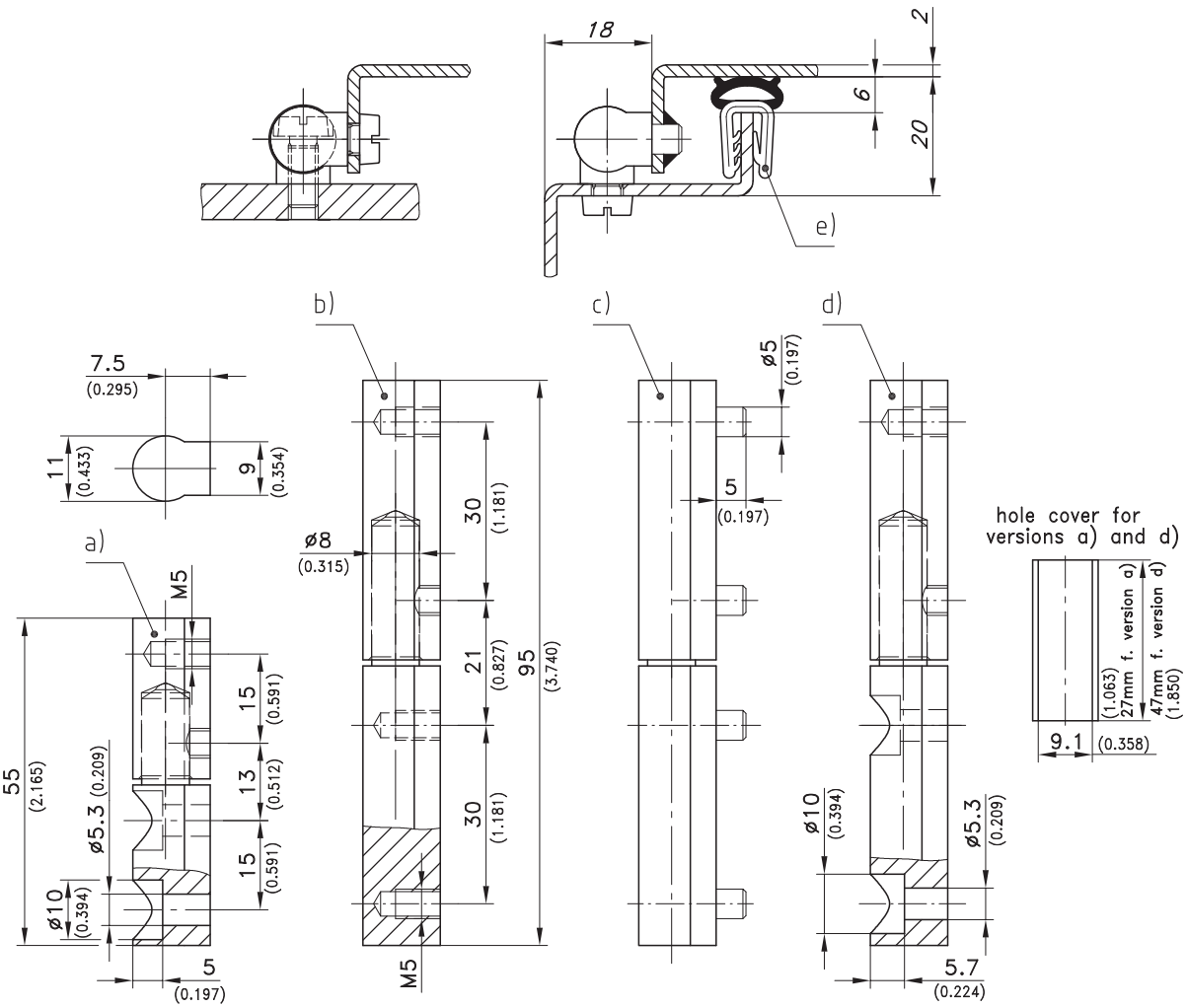

Version	Description	Part No.	See Page
a)	Length 55/2.165 with M5 thread in female part and holes 5.3/0.209 in male part, supplied with 2 stainless steel hole covers	242-9001	
b)	Length 95/3.740 threaded M5	242-9101	
c)	Length 95/3.740 with weld-on stubs	242-9102	
d)	Length 95/3.740 with M5 thread in female part and holes 5.3/0.209 in male part, supplied with 2 stainless steel hole covers	242-9103	
Clip-on profile		209-0201	05.12

10-01-2012 © copyright by DIRAK / Germany