4-182.02SL Hinge Pr05 SNAP-LINE 180°

Frame leaf tool-less installation, Surface mounted door, IP65, Door bending 25mm

Product Notes:.

- 180° opening angle for single cabinets 140° opening angle for adjacent cabinets
- Frame leaf features tool-less installation
  Door leaf - see Product System 4-182
- Seal for frame leaf on request
- Use with Dual Hook SNAP-LINE Rod Guide to allow for door reversal - see Product System 3-960SL dimension ⑱
- Water and dust tight according to IP65, DIN EN 60529 with O-rings (not included)
- Different installation method for leafs - see Product System 4-182 to 4-182.03SL

Material:

- **Frame leaf:** Zinc Die, Black
- **Door leaf:** Zinc Die, Black
- **Wings:** Sintered Metal, Coated
- **Pin ø6x15:** Stainless Steel
- **Pin ø6x50:** Steel, Zinc Plated
- **Washers:** Brass, Nickel Plated
- **Socket cylinder screws:** Steel, Zinc Plated
- **Spring washers:** Steel, Zinc Plated

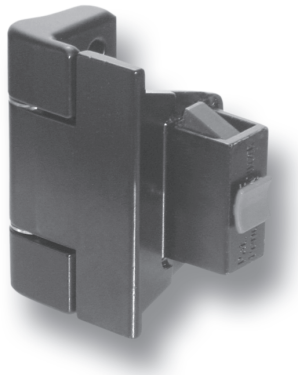

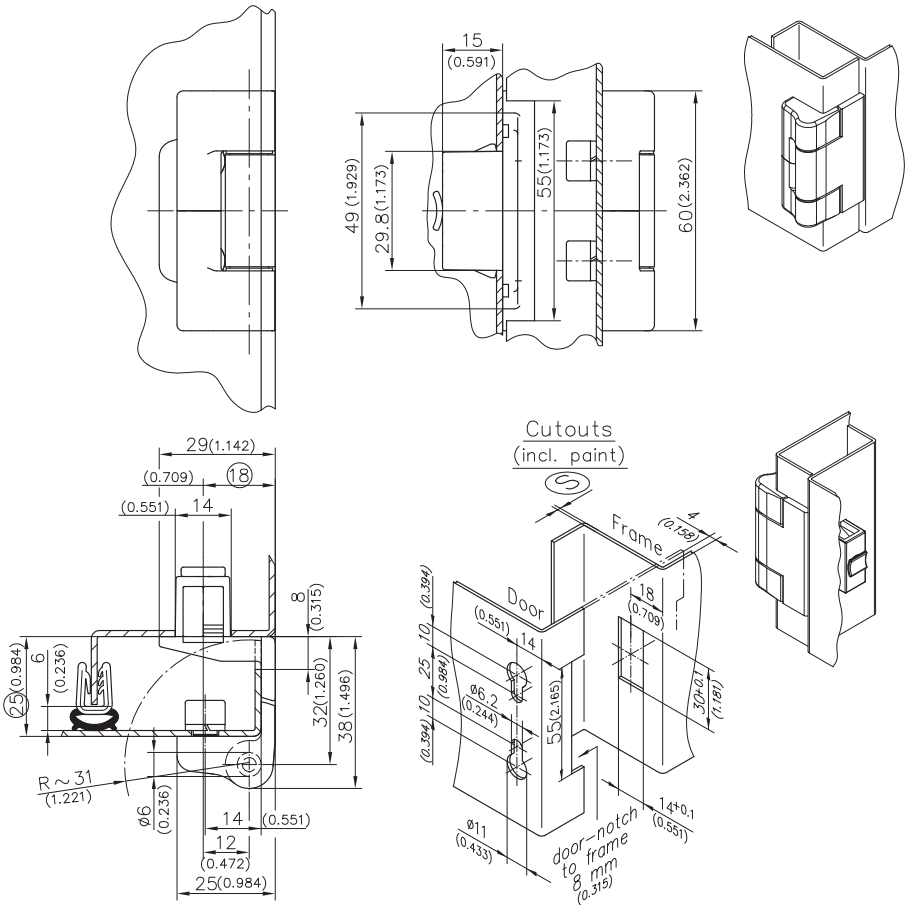

Hinge	Clamping Range ⓢ	Part No.	See Page
	1.2 - 1.7	412-9002.00-00015	
	1.7 - 2.2	412-9002.00-00020	
	2.2 - 2.7	412-9002.00-00025	
	2.7 - 3.2	412-9002.00-00030	
	3.2 - 3.7	412-9002.00-00035	
2 socket cylinder screws M6x10 DIN 7984 and 2 spring washers DIN 7980 are included.			
O-Ring 24x2mm		200-1005.00-02420	
Cover for cutout 30x14mm		292-0402.00-03014	10.14
Reinforcement plate for cutout 30x14 and 30x15mm		292-0701.15-01530	10.16
Hinge		292-0306.80-02530	10.17
Tool for uninstallation		292-0301.15-00000	10.17

10-01-2012 © copyright by DIRAK / Germany