4-182.01SL Hinge Pr05 SNAP-LINE 180°

Tool-less installation, Surface mounted door, IP65, Door bending 25mm

Product Notes:

- Accommodates adjacent cabinets
- Installed by a simple push into the cutout
- Seal for frame leaf to frame on request.
- Use with Dual Hook SNAP-LINE Rod Guide to allow for door reversal - see Product System 3-960SL dimension ⑱ .
- Water and dust tight according to IP65, DIN EN 60529 with O-rings (not included)
- Different installation method for leafs - see Product System 4-182 to 4-182.03SL

Material:

- **Frame leaf:** Zinc Die, Black
- **Door leaf:** Zinc Die, Black
- **Wings:** Sintered Metal, Coated
- **Pin:** Stainless Steel
- **Washer:** Brass

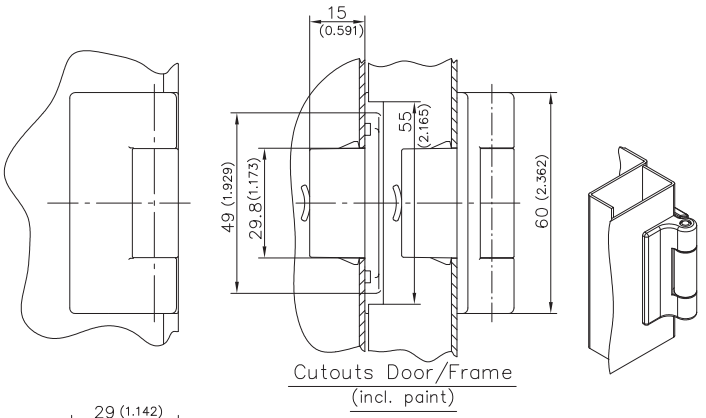

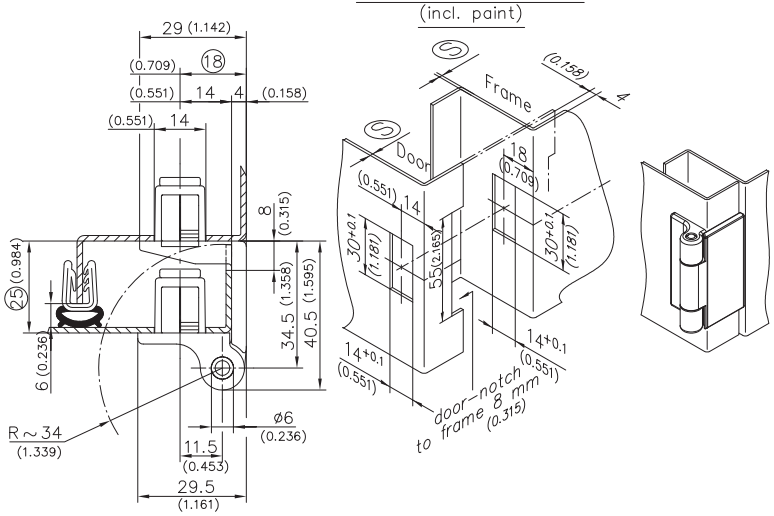

	Material Thickness Door/Frame Different		Part No.	See Page
	Clamping Range Ⓢ Door	Clamping Range Ⓢ Frame		
Hinge	1.2 - 1.7	2.2 - 2.7	412-8001.00-01525	
	Material thickness door/Frame identical e.g.			
	Clamping Range Door/Frame Ⓢ			
Hinge	1.2 - 1.7		412-9001.00-00015	
	1.7 - 2.2		412-9001.00-00020	
	2.2 - 2.7		412-9001.00-00025	
	2.7 - 3.2		412-9001.00-00030	
	3.2 - 3.7		412-9001.00-00035	
O-ring 24x2mm			200-1005.00-02420	
Cover for cutout 30x14mm			292-0402.00-03014	10.14
Reinforcement plate for cutout 30x14 and 30x15mm			292-0701.15-01530	10.16
Tool for uninstallation			292-0306.80-02530	10.17
Tool for uninstallation			292-0301.15-00000	10.17

10-01-2012 © copyright by DIRAK / Germany