7-150 Concealed Hinge Pr03 120°

Surface mounted door, Stainless Steel, Door bending 20mm

Product Notes:
- RH and LH application
- Frame leaf fastens to panel with screws
  Door leaf fastens to panel with screws or weld-on
- POM pin is self-securing

Material:
- **Hinge, pin:** Stainless Steel AISI 304
- **Pin:** POM

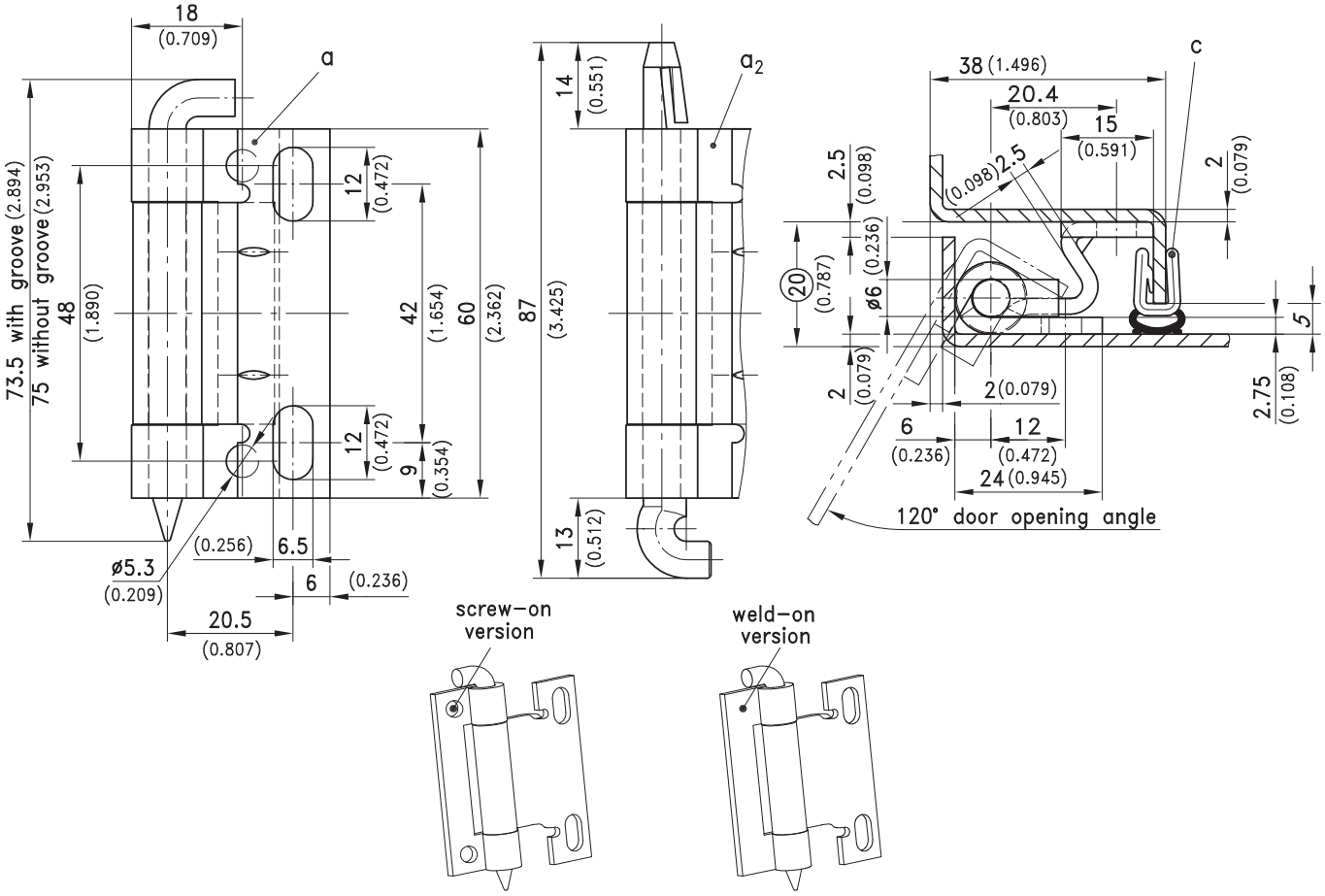

120° Concealed Hinge	Door Leaf - Screw-on	Door Leaf - Weld-on	See Page
a) Pin without groove, Stainless Steel	216-9103	216-9120	
a1) Pin with groove for retaining ring, Stainless Steel	216-9111	216-9125	
a2) Pin, POM	216-9105	216-9123	
Optional:			
b) Retaining ring DIN 6799 RS4 for versions a1)	800-0138	800-0138	
c) Clip-on profiles	209-0205	209-0205	05.12

10-01-2012 © copyright by DIRAK / Germany