4-140 Concealed Hinge Pr03 120°

Surface mounted door, Door bending 26mm

Product Notes:
- RH and LH application
- For short enclosures a self-securing POM pin that is mounted from the bottom can be supplied
- Frame leaf fastens to panel with screws
  Door leaf fastens to panel with screws or weld-on

Material:
- **Frame leaf:** Steel, Zinc Plated
- **Door leaf:** Steel, Untreated
- **Pin:** Steel, Zinc Plated or POM

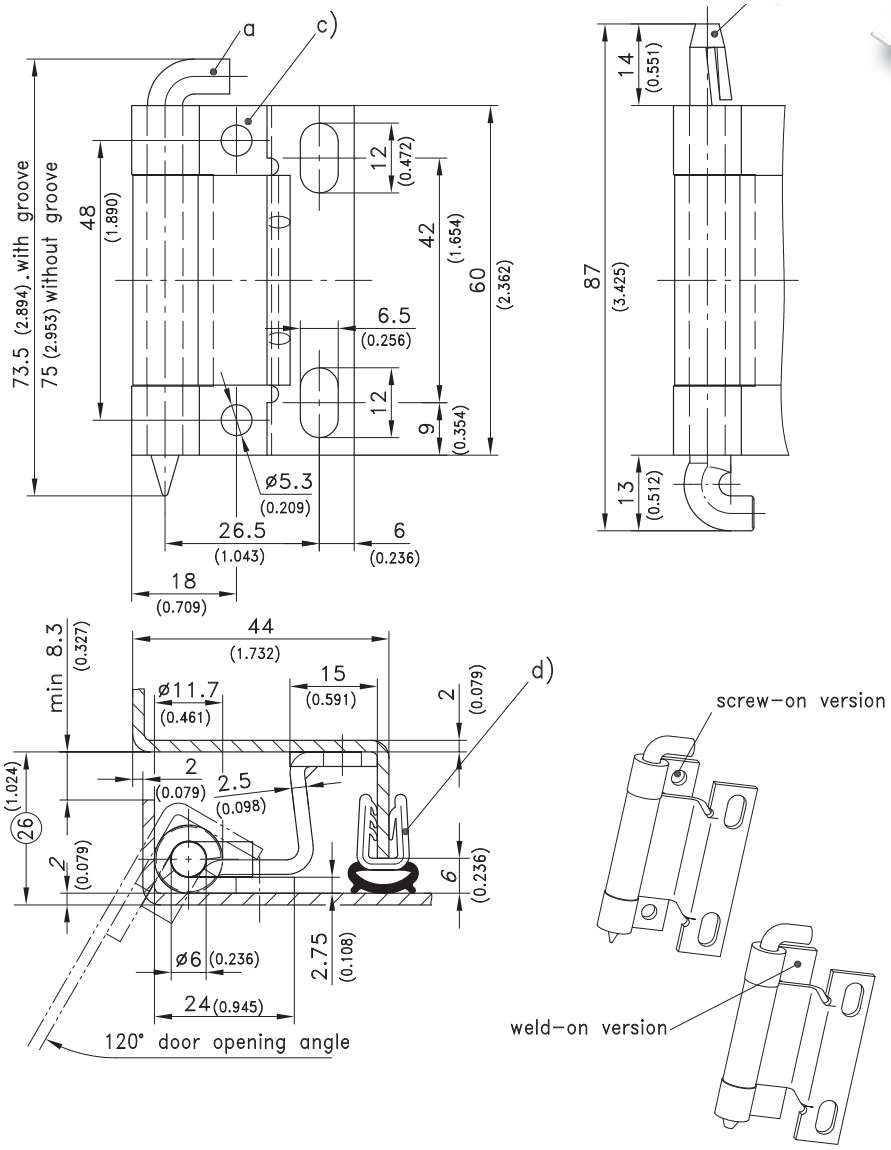

120° Hinge, Door bending 26	Door Leaf Screw-on	Door Leaf Weld-on	See Page
a) Pin without groove	216-9004	216-9029	
a1) Pin with groove for retaining ring	216-9012	216-9028	
a2) Pin POM self-securing	216-9007	216-9030	
Please order separately:			
b) Retaining ring DIN 6799 RS4 for pin with groove	800-0137	800-0137	
Stainless steel version			04.124
c) Door leaf like roll Ø6			04.104
d) Clip-on profile		209-0201	05.12

10-01-2012 © copyright by DIRAK / Germany