7-145 Concealed Hinge Pr03 120°

Surface mounted door, Stainless Steel, Door bending 20mm

Product Notes:
- RH and LH application
- 120° opening angle
- Zinc die - see Product System 4-122

Material:
- **Hinge parts and pin:** Stainless Steel AISI 304

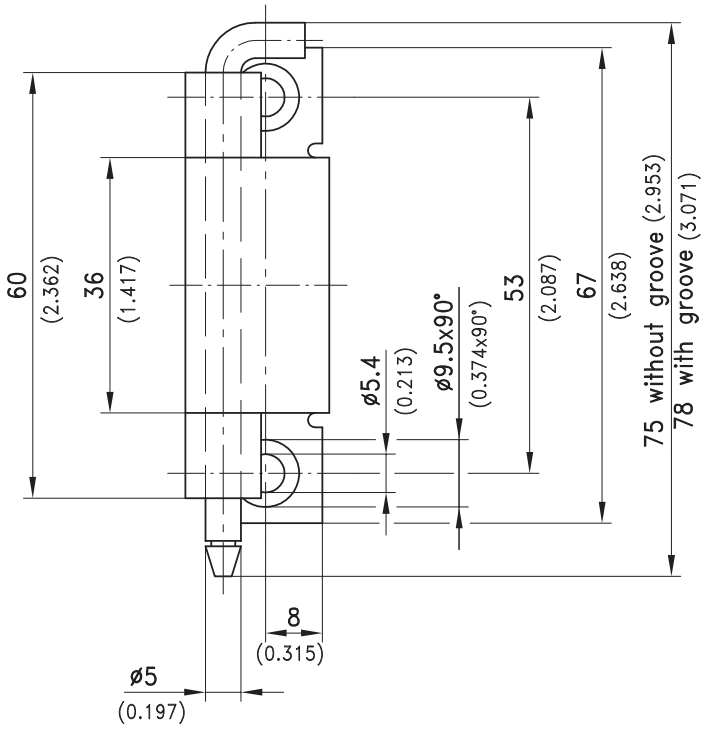

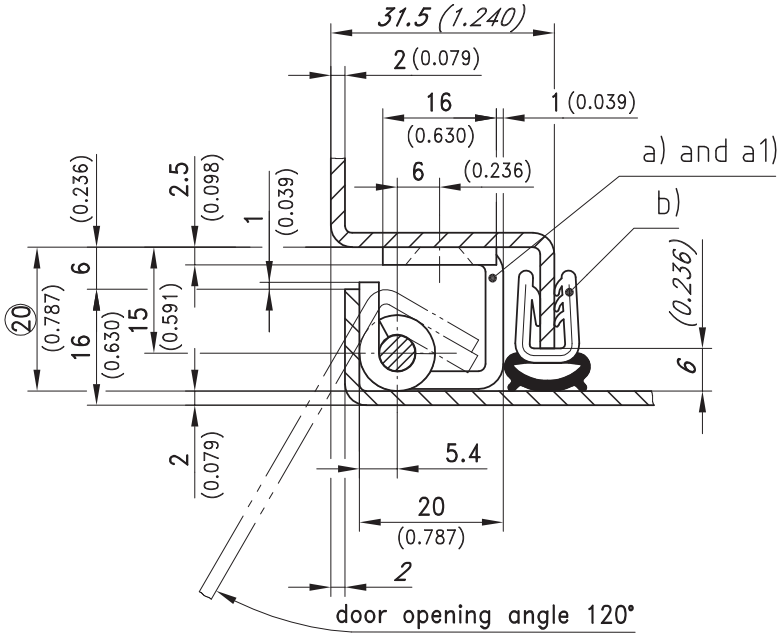

120° Concealed Hinge	Part No.	See Page
a) Pin without groove	216-9115	
a1) Pin with groove (incl. C-clip)	216-9116	
b) Clip-on profile	209-0201	05.12

10-01-2012 © copyright by DIRAK / Germany